NO. OF OUTLETS DOUBLE SIDE	OVERALL LENGTH IN mm W/O DRAIN V/V	OVERALL LENGTH IN mm C/W DRAIN V/V	PART NO.
2	250.0	288.0	AH34RP2SL-14RVSL
3	300.0	338.0	AH34RP3SL-14RVSL
4	350.0	388.0	AH34RP4SL-14RVSL
5	400.0	438.0	AH34RP5SL-14RVSL
6	450.0	488.0	AH34RP6SL-14RVSL
7	500.0	538.0	AH34RP7SL-14RVSL
8	550.0	588.0	AH34RP8SL-14RVSL
9	600.0	638.0	AH34RP9SL-14RVSL
10	650.0	688.0	AH34RP10SL-14RVSL
11	700.0	738.0	AH34RP11SL-14RVSL
12	750.0	788.0	AH34RP12SL-14RVSL
13	800.0	838.0	AH34RP13SL-14RVSL
14	850.0	888.0	AH34RP14SL-14RVSL
15	900.0	938.0	AH34RP15SL-14RVSL

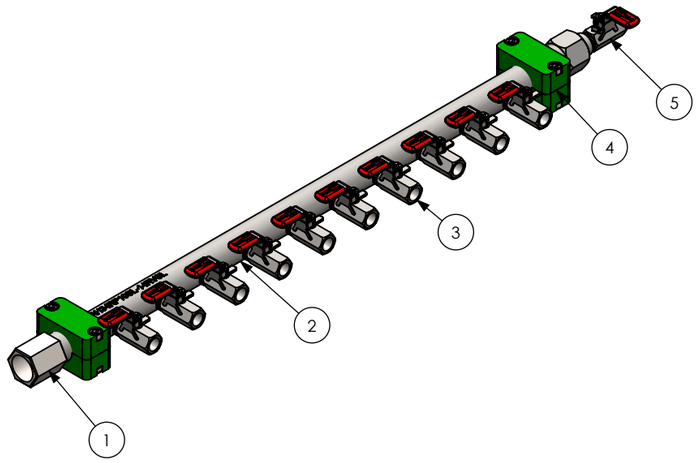

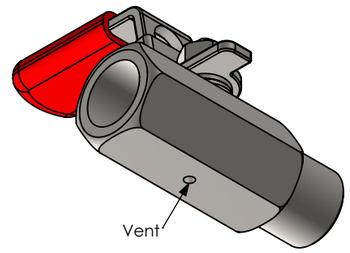

Detail A

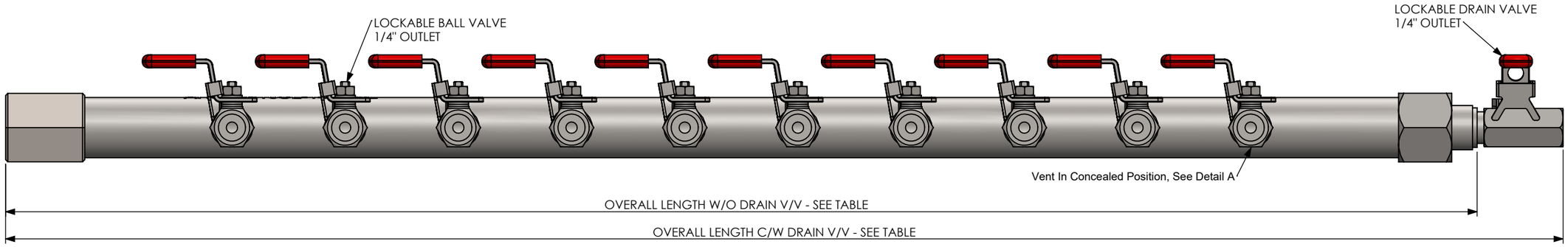

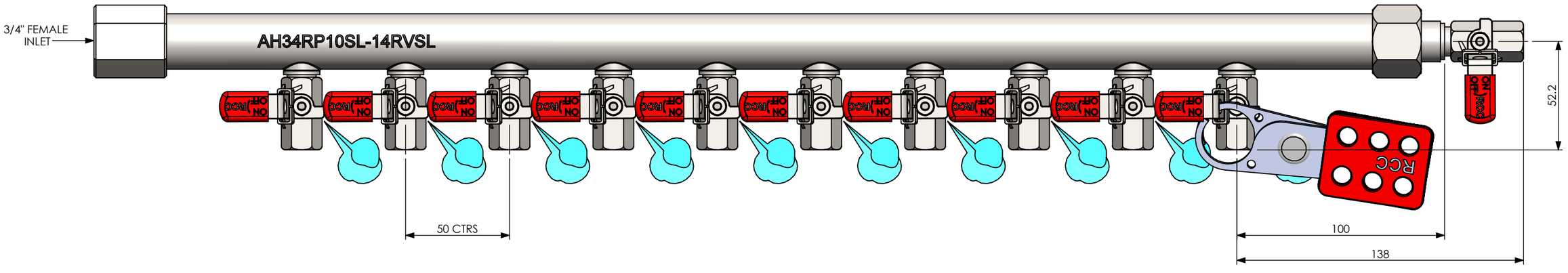

ITEM	DESCRIPTION	QUANTITY
1	3/4" Female Inlet Fitting 316 S/S	1
2	Manifold Body 316 S/S	1
3	Outlet Isolation Valve (Lockable) 316 S/S	See Table
4	Mounting Bracket P.P.	2
5	Drain Valve (Lockable) 316 S/S	1

Projection: First Angle Projection

NOTE: ALL DIMENSIONS IN: MILLIMETRES.

Gen. Tolerance: (unless otherwise specified)

Material: Type 316 ASTM-1-312-09

Finish: Standard

Scale: NTS

Drawn By: T. Hennessy

Drawn Date: 07/Jan/2024

Checked By: RC

Approved By: RC

RCC Ltd.
1 Leeview Place, Monkstown, Co. Cork.
Tel: 021-4841562 Fax: 021-4841412
email: sales@rccirl.ie
www.airmanifolds.ie

Description: **AH34 Series 1**0-Way Single Sided Stainless Steel Instrument Air Manifold W/O Inlet Isolation Valve - Venting

Part No: **AH34RP10SL-14RVSL**

ECN:

Project No:

Rev: A